Application Note

AD168 and RS422 PTZ Control

AN034

This application note provides recommended design practices when connecting the SpeedDome series domes via the RS422 protocol to an AD168 Matrix Switching System.

There are two configurations one can choose when designing an AD168 system with RS422 pan/tilt zoom (PTZ) control. The first configuration is using the AD168CCM (Control Code Module) and the second is using an AD2083-02B RS422 Code Generator. The question is when do you use one over the other? The following will provide technical considerations regarding each of the configurations above.

RS422 Control using the AD168CCM

The AD168CCM provides a single RS422 output that supports dome PTZ address from 1 to 99. To connect this single output to multiple domes the RJ860AP 10 Position J-Box is recommended. The RJ860AP accepts a single RS422 input and provides 10 individual RS422 outputs for dome connections in the field. The RJ860 also provides an auxiliary output to cascade to another RJ860AP for additional dome connections. However, to minimize possible data collisions in the AD168CCM, it is recommended to limit the maximum number of dome connections to 10 or less.

NOTE: Over tasking the single RS422 output on the CCM may result in data corruption and unreliable system dome control. If this does occur, the diagnostic L.E.D on the CCM card will be out of sync. The card will need to be reset. This is done by simply pushing the reset button on the card.

Below is a diagram illustrating the RS422 dome connections utilizing the AD168CCM and 10 position J-Box.

Information furnished by Sensormatic is believed to be accurate and reliable. However, no responsibility is assumed by Sensormatic for its use, nor any infringements of other rights of third parties which may result from its use. No license is granted by implications or otherwise under any patent rights of Sensormatic.

American Dynamics • One Blue Hill Plaza • Pearl River NY 10965
Applications (800) 800-507-6268 - Option 4 • Fax (845) 624-7658

02/03 Rev A

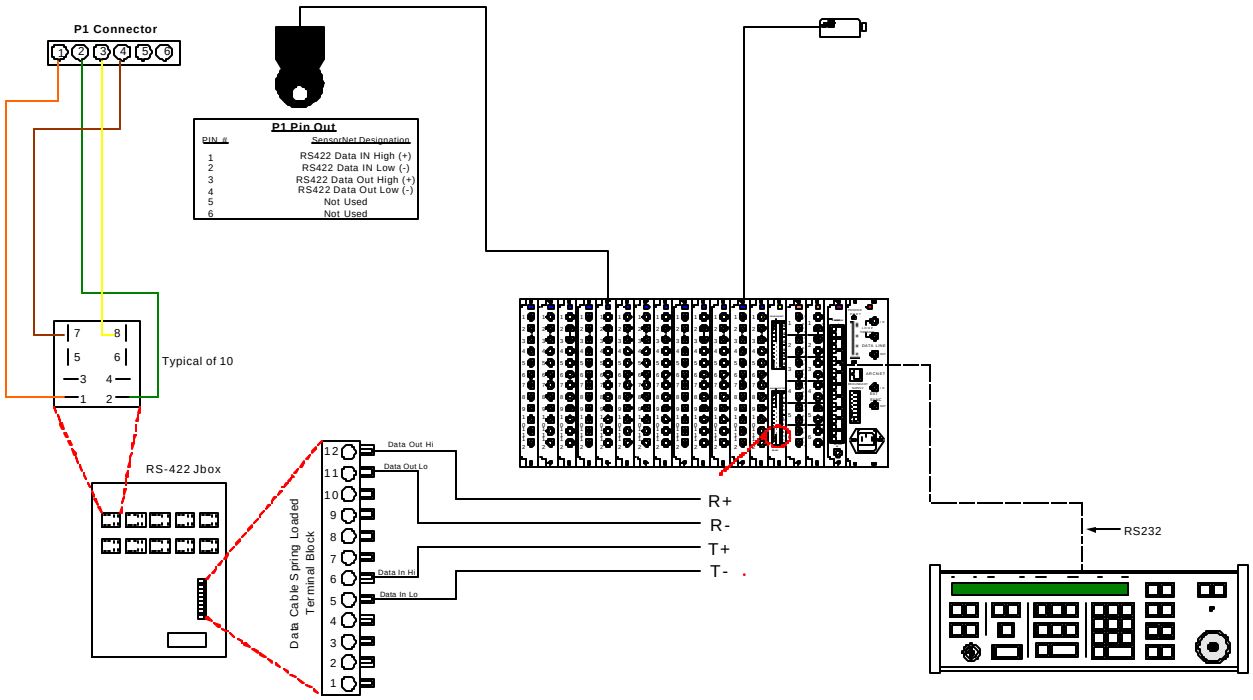

If there are more then 10 domes that need to be connected via the RS422 protocol, it is recommended that a more distributed approach be taken utilizing the AD2083-02B.

RS422 Control Using the AD2083-02B

The AD2083-02B provides 16 individual RS422 outputs that are separated into 4 groups of connectors (refer to AD2083-02B manual for more detailed information on the groups). Each group can be configured to address a maximum of 99 PTZ cameras. The AD2083-02B communicates to the AD168 via the High Speed Data Line connection using standard RG59U video coax cable. The AD2083-02B is recommended whenever 10 or more domes are wired via the RS422 protocol to the AD168 system. Configuring the system with the AD2083-02B provides a distributed RS422 network and increases the number of direct RS422 dome connections. By distributing the dome connections over 16 outputs, opportunities for data collision is reduced and thus overall system reliability is increased. Below is a diagram illustrating the RS422 dome connections utilizing the AD2083-02B and AD168 Matrix Switching System.

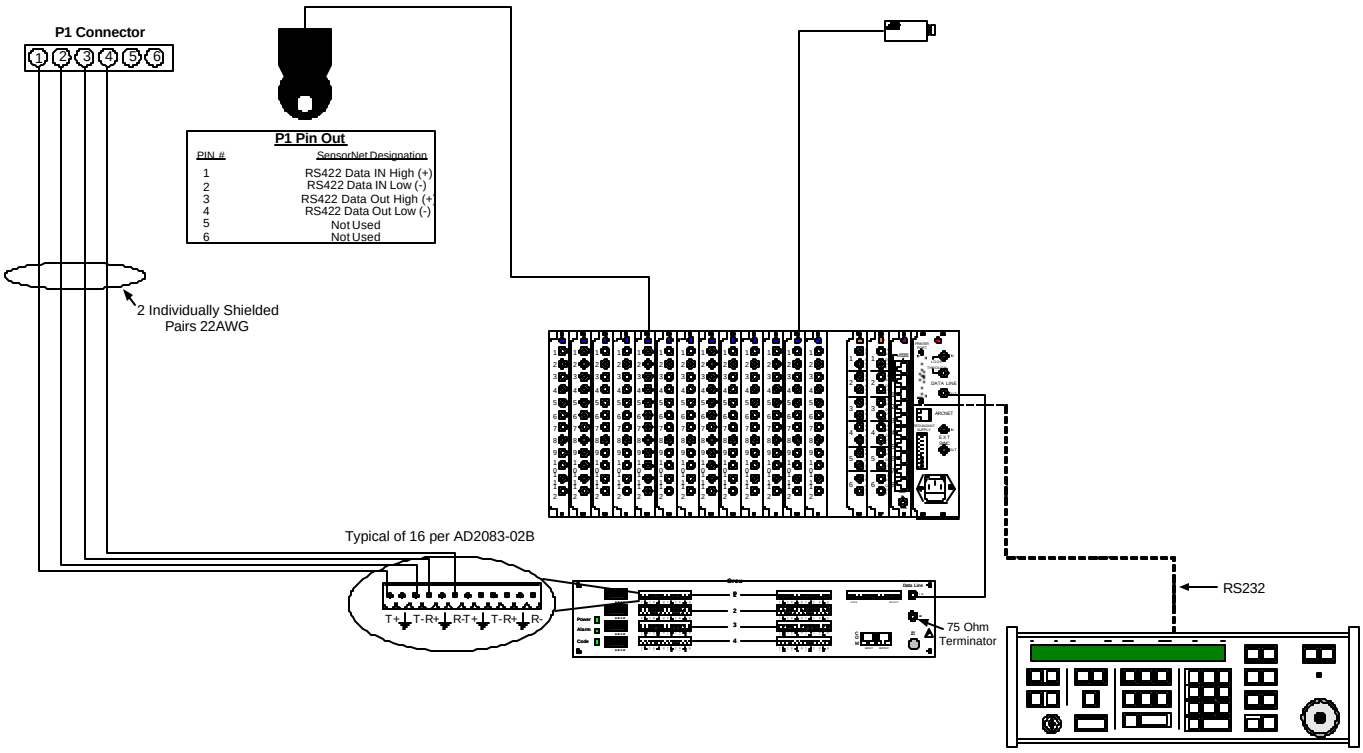

American Dynamics • One Blue Hill Plaza • Pearl River NY 10965
Applications (800) 800-507-6268 - Option 4 • Fax (845) 624-7658